SPOOL VALVE HYDRAULIC MOTORS

SPOOL VALVE HYDRAULIC MOTORS

GENERAL INFORMATION:

Orbit motors convert hydraulic energy (pressure, oil flow) into mechanical energy (torque, speed). Hydraulic orbit motors operate on the principle of an internal gear (rotor) rotating within a fixed external gear (stator). The internal gear transmits the torque generated by the application of pressure from hydraulic oil fed into motor which is then delivered via the motor's output shaft. Orbit motors have high starting torque and constant output torque at wide speed range.

DISTRIBUTOR VALVE

MM, MP, MR, SP, SR, MH, PL, RL, PK, RK, RW, HW series motors have spool valve: the distributor valve has been integrated with the output shaft. The cardan shaft rotates distributor valve and transfers mechanical energy from gerotor set to output shaft. The valve has hydrodynamic bearings and has infinite life when load ratings are not exceeded.

GEARWHEEL SET

There are two forms of gearwheel set:

- Gerotor set has plain teeth. These type of motors are suitable for long operating periods at moderate pressures or short operating periods at high pressures. MM, MP, SP, PL and PK series motors have gerotor set.
- Roll-gerotor set has teeth fitted with rollers. The rollers reduce local stress and the tangential reaction forces on the rotor reducing friction to a minimum. This gives long operating life and better efficiency even at continuous high pressures. Roll-gerotor sets are recommended for operation with thin oil and for applications with continually reversing loads. MR, SR, RL, RK , MH, RW and HW series motors have roll-gerotor set.

FEATURES:

Standard Motor The standard motor mounting flange is located as close to the output shaft as possible. This type of mounting supports the motor close to the shaft load. This mounting flange is also compatible with many standard gear boxes.

Wheel Motor W mounting flange makes the motors possible to fit a wheel hub or a winch drum so that the radial load acts closer to motor bearings. This gives the best utilization of the bearing capacity and is a very compact solution.

Needle Bearing MPN and MRN have an output shaft supported in needle bearing. These types motors are suitable for operating conditions such us frequent start and stops, vibration on the shaft, high static and dynamic radial loads in short operating terms.

Low Leakage LL Series hydraulic motors are designed to operate at the whole standard range of working conditions (pressure drop and frequency of rotation), but with considerable decreased volumetric losses in the drain ports. This motors are suitable for hydraulic systems with series-connected motors with demands for low leakage.

Low Speed Valve LSV feature optimizes the motor for low-speed performance. Motors with this valving provide very low speed while maintaining high torque. They are designed to run continuously at low speed (up to 200 min^{-1}) at normal pressure drop and reduced flow. Optimal run is guaranteed at frequency of rotation from 20 to 50 min^{-1} . Motors with this valving have an increased starting pressure and are not recommended for using at pressure drop less than 40 bar.

Free Running FR motors are with increased clearance at all friction parts, allowing the shaft to rotate more freely with less mechanical drag. The increased clearance also improves lubrication of the wear surfaces of gear set and friction parts. Additional advantages of “FR” version are prolonging of the life of the hydraulic motors at high speeds , as well as the possibility to use them in systems with wide variation of the loading. FR Series motors are designed to operate with high speed /over than 300 min^{-1}/ and low pressure drop. Volumetric efficiency may be reduced slightly.

High Pressure Shaft Seal The high pressure shaft seals allow the motors to withstand high case pressures at high speeds without external drain line.

Motors with Speed Sensor Motors are available with integrated inductive speed sensor. The output signal is a standardized voltage signal that can be used to control the speed of a motor. The torque and the radial load of the motor are not affected by the installation of speed sensor.

HYDRAULIC MOTORS MM

CONTENTS

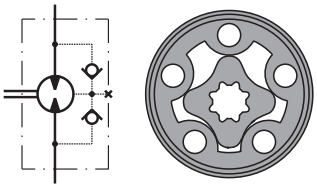

APPLICATION

- » Conveyors
- » Textile machines
- » Mining machinery
- » Machine tools
- » Ventilators
- » Construction plant equipment and access platforms etc.

OPTIONS

- » Model - Spool valve, gerotor
- » With or without flange
- » Side and rear ports
- » Series with pressure valve(s)
- » Shafts - straight and splined
- » Metric and BSPP ports
- » Speed sensoring;
- » Other special features

Pressure Settings at Flow
Q=2 lpm [.53 GPM] , 32 mm ²/s [150 SUS], 50°C [122°F]

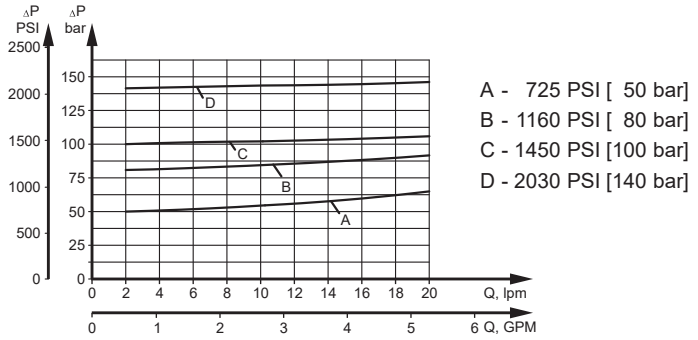

MMP Series with Integrated
Internal Crossover Relief Valve
A→B, Δp=100 or 50 bar [1450 or 725 PSI]

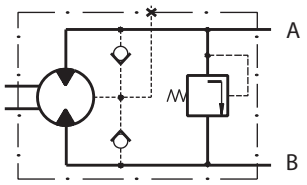

MMP Series with Integrated
Internal Crossover Relief Valve
B→A, Δp=100 or 50 bar [1450 or 725 PSI]

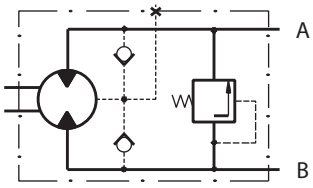

Pressure Losses

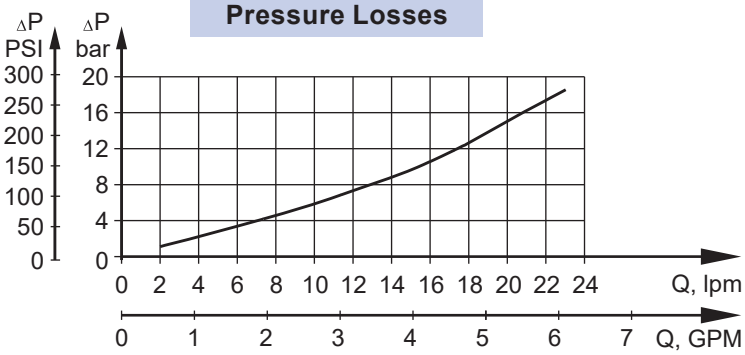

MMD Series with Integrated
Internal Crossover Relief Valves
A↔B, Δp=100 or 50 bar [1450 or 725 PSI]

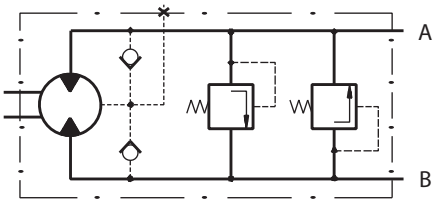

GENERAL

Max. Displacement, cm³/rev [in³/rev]	50 [3.05]
Max. Speed, [RPM]	2440
Max. Torque, daNm [lb-in]	cont.: 4,5 [398] int.: 5,8 [513]
Max. Output, kW [HP]	3,2 [4.3]
Max. Pressure Drop, bar [PSI]	cont.: 105 [1500] int.: 140 [2030]
Max. Oil Flow, lpm [GPM]	25 [6.6]
Min. Speed, [RPM]	20
Pressure fluid	Mineral based- HLP(DIN 51524) or HM(ISO 6743/4)
Temperature range, °C [°F]	-40÷140 [-40÷284]
Optimal Viscosity range, mm²/s [SUS]	20÷75 [98÷347]
Filtration	ISO code: 18/16/13 According to ISO 4406-1999

SPECIFICATION DATA

Type		MM 8	MM 12.5	MM 20	MM 32	MM 40	MM 50
Displacement, cm^3/rev [in^3/rev]		8,2 [.50]	12,5 [.77]	19,9 [1.22]	31,6 [1.93]	39,8 [2.43]	50 [3.08]
Max. Speed, [RPM]	Cont.	1950	1550	1000	630	500	400
	Int.*	2450	1940	1250	800	630	500
Max. Torque daNm [lb-in]	Cont.	1,1 [95]	1,6 [140]	2,5 [220]	4,0 [350]	4,5 [400]	4,6 [410]
	Int.*	1,5 [135]	2,3 [200]	3,5 [310]	5,7 [500]	7,0 [620]	8,8 [780]
	Peak**	2,1 [187]	3,3 [293]	5,1 [453]	6,4 [568]	8,2 [725]	10,0 [885]
Max. Output kW [HP]	Cont.	1,8 [2.4]	2,4 [3.2]	2,4 [3.2]	2,4 [3.2]	2,2 [3.0]	1,8 [2.4]
	Int.*	2,6 [3.5]	3,2 [4.3]	3,2 [4.3]	3,2 [4.3]	3,2 [4.3]	3,2 [4.3]
Max. Pressure Drop bar [PSI]	Cont.	100 [1450]	100 [1450]	100 [1450]	100 [1450]	90 [1310]	70 [1020]
	Int.*	140 [2030]	140 [2030]	140 [2030]	140 [2030]	140 [2030]	140 [2030]
	Peak**	200 [2900]	200 [2900]	200 [2900]	160 [2320]	160 [2320]	160 [2320]
Max. Oil Flow lpm [GPM]	Cont.	16 [4.2]	20 [5.3]	20 [5.3]	20 [5.3]	20 [5.3]	20 [5.3]
	Int.*	20 [5.3]	25 [6.6]	25 [6.6]	25 [6.6]	25 [6.6]	25 [6.6]
Max. Inlet Pressure bar [PSI]	Cont.	140 [2030]	140 [2030]	140 [2030]	140 [2030]	140 [2030]	140 [2030]
	Int.*	175 [2540]	175 [2540]	175 [2540]	175 [2540]	175 [2540]	175 [2540]
	Peak**	225 [3260]	225 [3260]	225 [3260]	225 [3260]	225 [3260]	225 [3260]
Max. Return Pressure without Drain Line or Max. Pressure in Drain Line, bar [PSI]	Cont. 0-100 RPM	140 [2030]	140 [2030]	140 [2030]	140 [2030]	140 [2030]	140 [2030]
	Cont. 100-400 RPM	105 [1500]	105 [1500]	105 [1500]	105 [1500]	105 [1500]	105 [1500]
	Cont. 400-800 RPM	50 [725]	50 [725]	50 [725]	50 [725]	50 [725]	50 [725]
	Cont. >800 RPM	20 [290]	20 [290]	20 [290]	-	-	-
	Int.* 0-max. RPM	140 [2030]	140 [2030]	140 [2030]	140 [2030]	140 [2030]	140 [2030]
Max. Return Pressure with Drain Line bar [PSI]	Cont.	140 [2030]	140 [2030]	140 [2030]	140 [2030]	140 [2030]	140 [2030]
	Int.*	175 [2540]	175 [2540]	175 [2540]	175 [2540]	175 [2540]	175 [2540]
	Peak**	225 [3260]	225 [3260]	225 [3260]	225 [3260]	225 [3260]	225 [3260]
Max. Starting Pressure with Unloaded Shaft, bar [PSI]		4 [60]	4 [60]	4 [60]	4 [60]	4 [60]	4 [60]
Min. Starting Torque daNm [lb-in]	At max. press. drop Cont.	0,7 [60]	1,2 [105]	2,1 [185]	3,4 [300]	3,8 [335]	4,1 [365]
	At max. press. drop Int.*	1,0 [90]	1,7 [150]	2,9 [255]	4,8 [425]	6,2 [550]	7,9 [700]
Min. Speed***, [RPM]		50	40	30	30	25	20
Weight, kg [lb] For "F" flange: + 0,200 [.441]	MM	1,9 [4.2]	2,0 [4.41]	2,1 [4.63]	2,2 [4.85]	2,3 [5.07]	2,5 [5.51]
	MMF(S)	2,0 [4.41]	2,1 [4.63]	2,2 [4.85]	2,3 [5.07]	2,4 [5.29]	2,6 [5.73]
	MMP	2,2 [4.85]	2,3 [5.07]	2,4 [5.29]	2,5 [5.51]	2,6 [5.73]	2,8 [6.17]
	MMD	2,6 [5.73]	2,7 [5.95]	2,8 [6.17]	2,9 [6.39]	3,0 [6.61]	3,2 [7.05]

* Intermittent operation: the permissible values may occur for max. 10% of every minute.
** Peak load: the permissible values may occur for max. 1% of every minute.
*** For speeds lower than given, consult factory or your regional manager.

1. Intermittent speed and intermittent pressure must not occur simultaneously.
2. Recommended filtration is per ISO cleanliness code 20/16. A nominal filtration of 25 micron or better.
3. Recommend using a premium quality, anti-wear type mineral based hydraulic oil HLP(DIN51524) or HM (ISO 6743/4). If using synthetic fluids consult the factory for alternative seal materials.
4. Recommended minimum oil viscosity 13 mm²/s [70 SUS] at 50°C [122°F].
5. Recommended maximum system operating temperature is 82°C [180°F].
6. To assure optimum motor life fill with fluid prior to loading and run at moderate load and speed for 10-15 minutes.

MM MOTORS

FUNCTION DIAGRAMS

MM 8

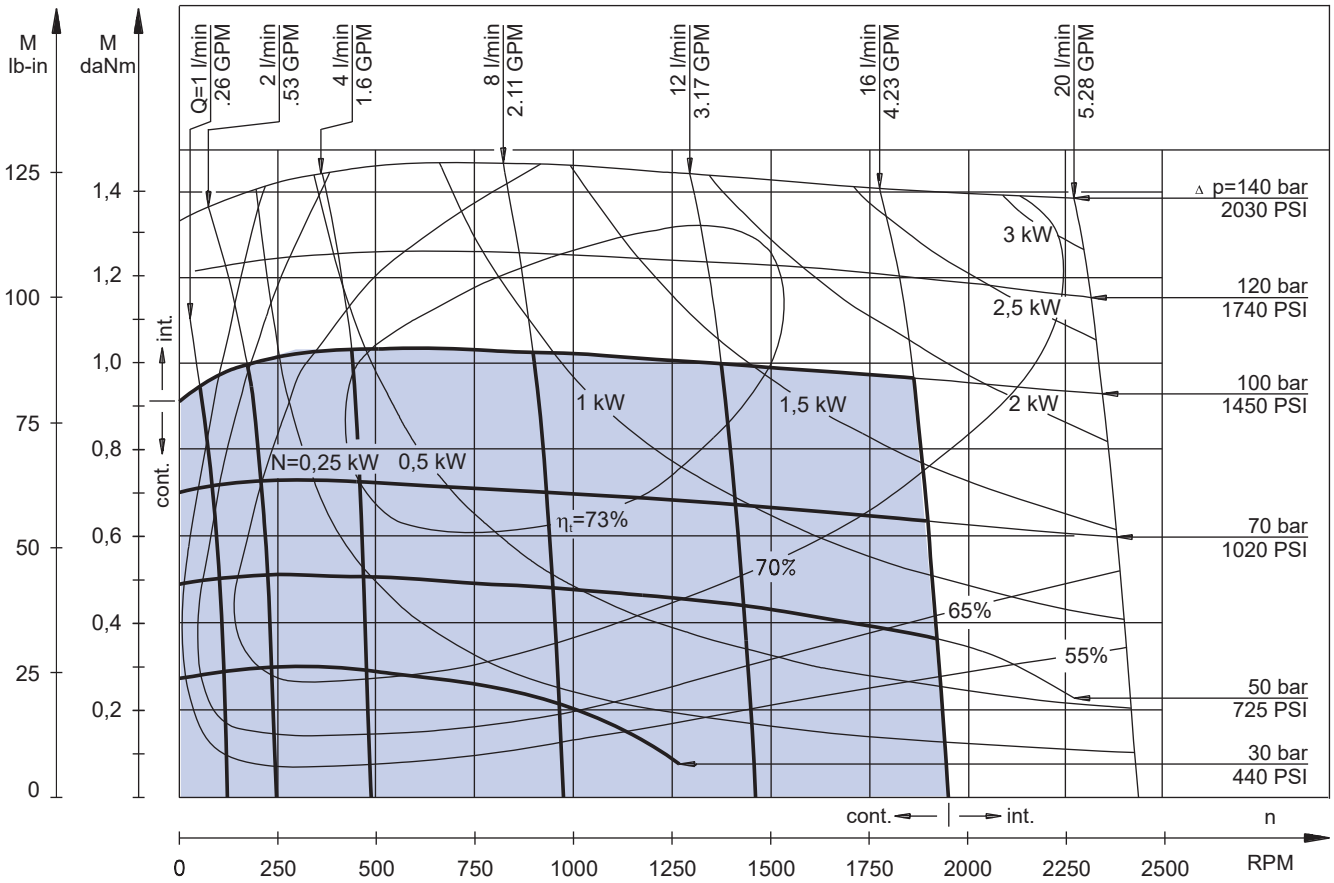

MM 12,5

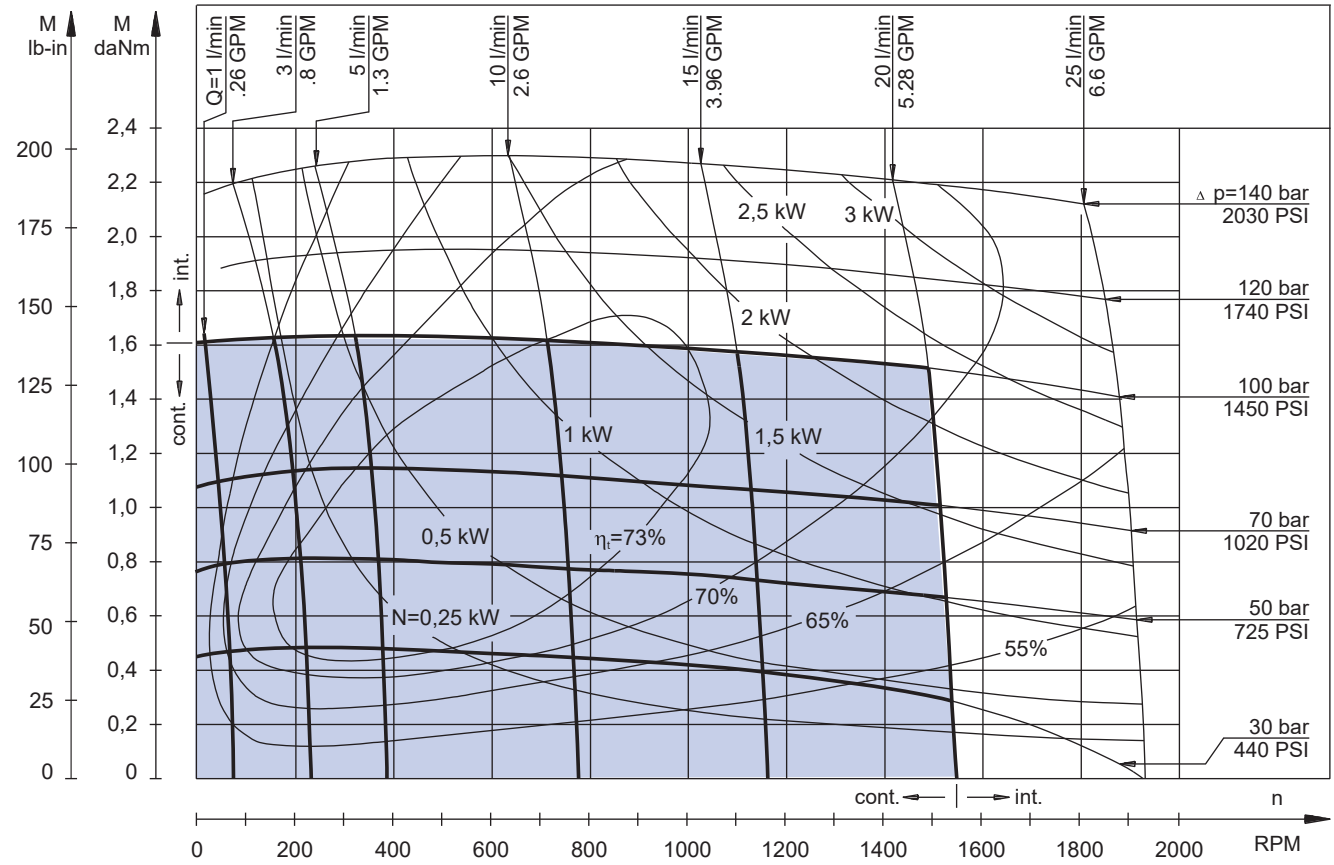

The function diagrams data is for average performance of randomly selected motors at back pressure 5÷10 bar [72.5÷145 PSI] and oil with viscosity of 32 mm²/s [150 SUS] at 50°C [122°F].

MM MOTORS

FUNCTION DIAGRAMS

MM 20

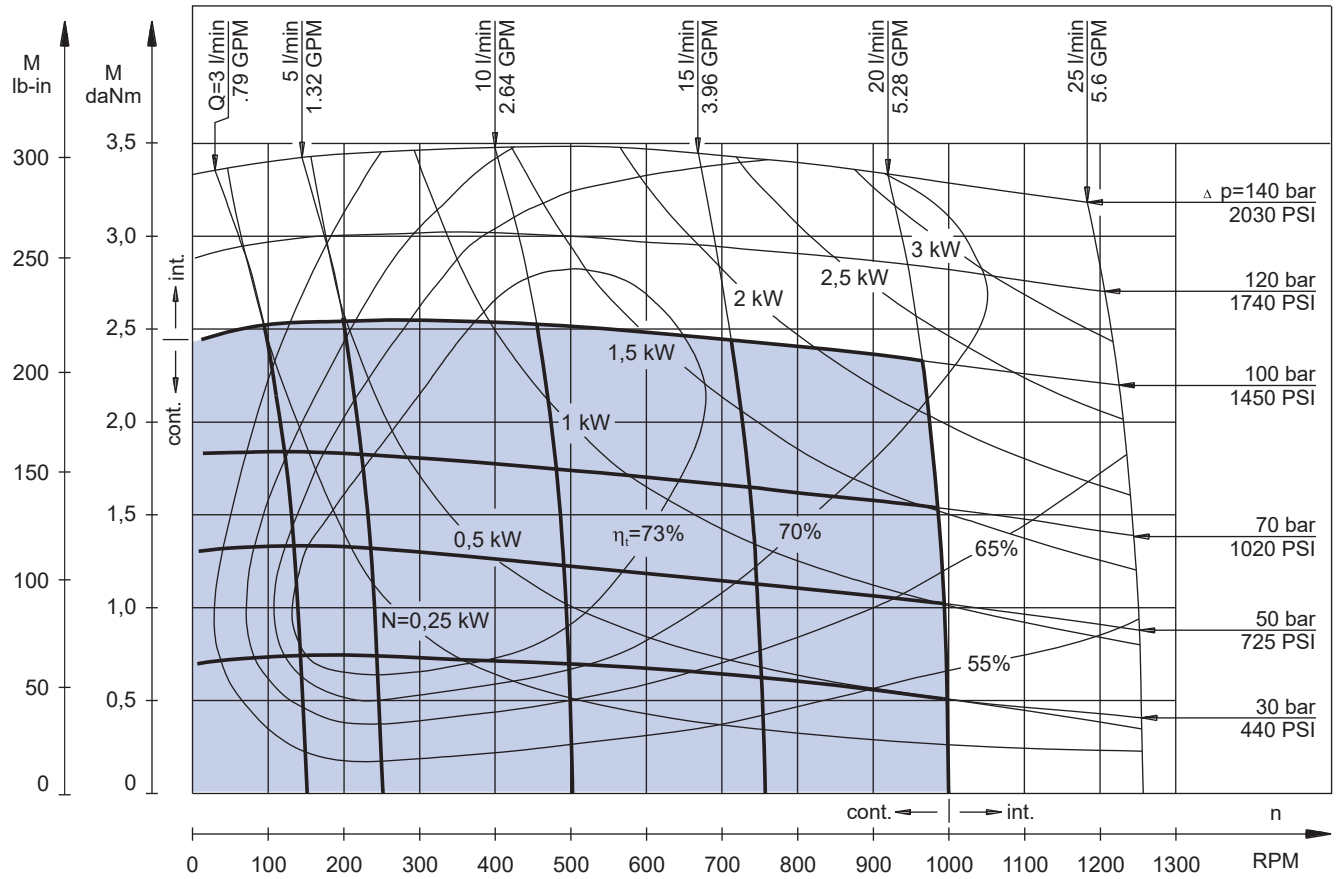

MM 32

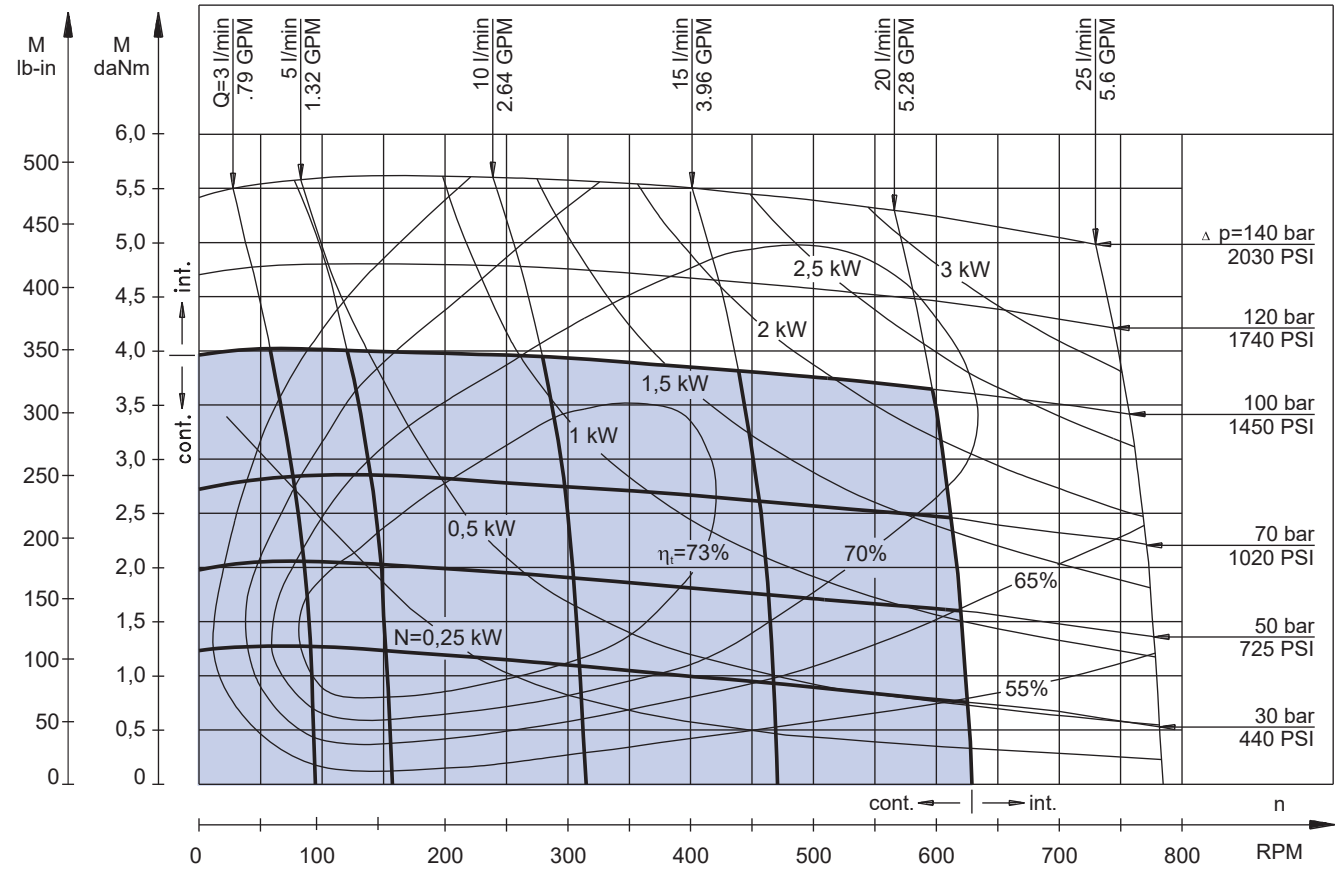

The function diagrams data is for average performance of randomly selected motors at back pressure

MM MOTORS

FUNCTION DIAGRAMS

MM 40

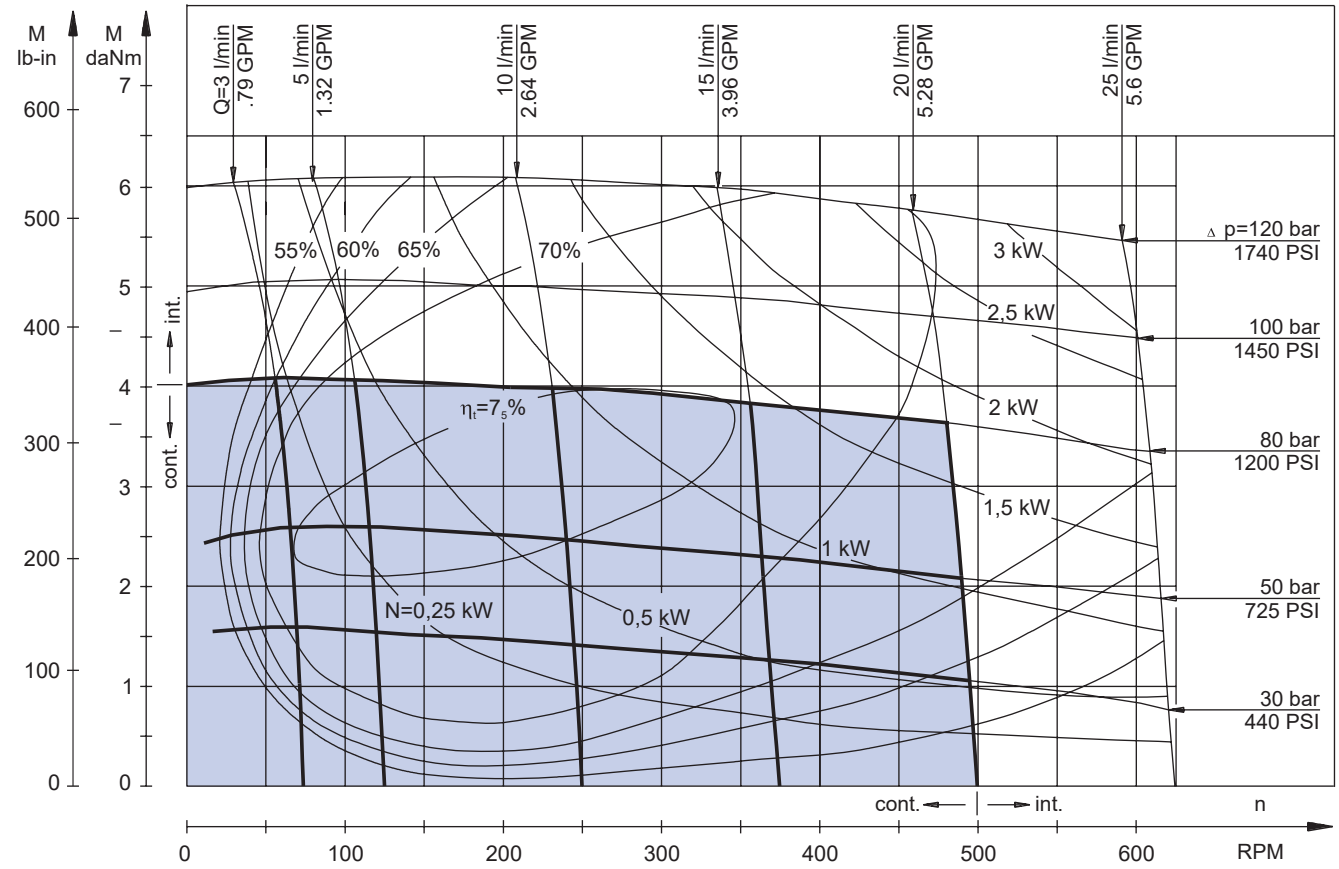

MM 50

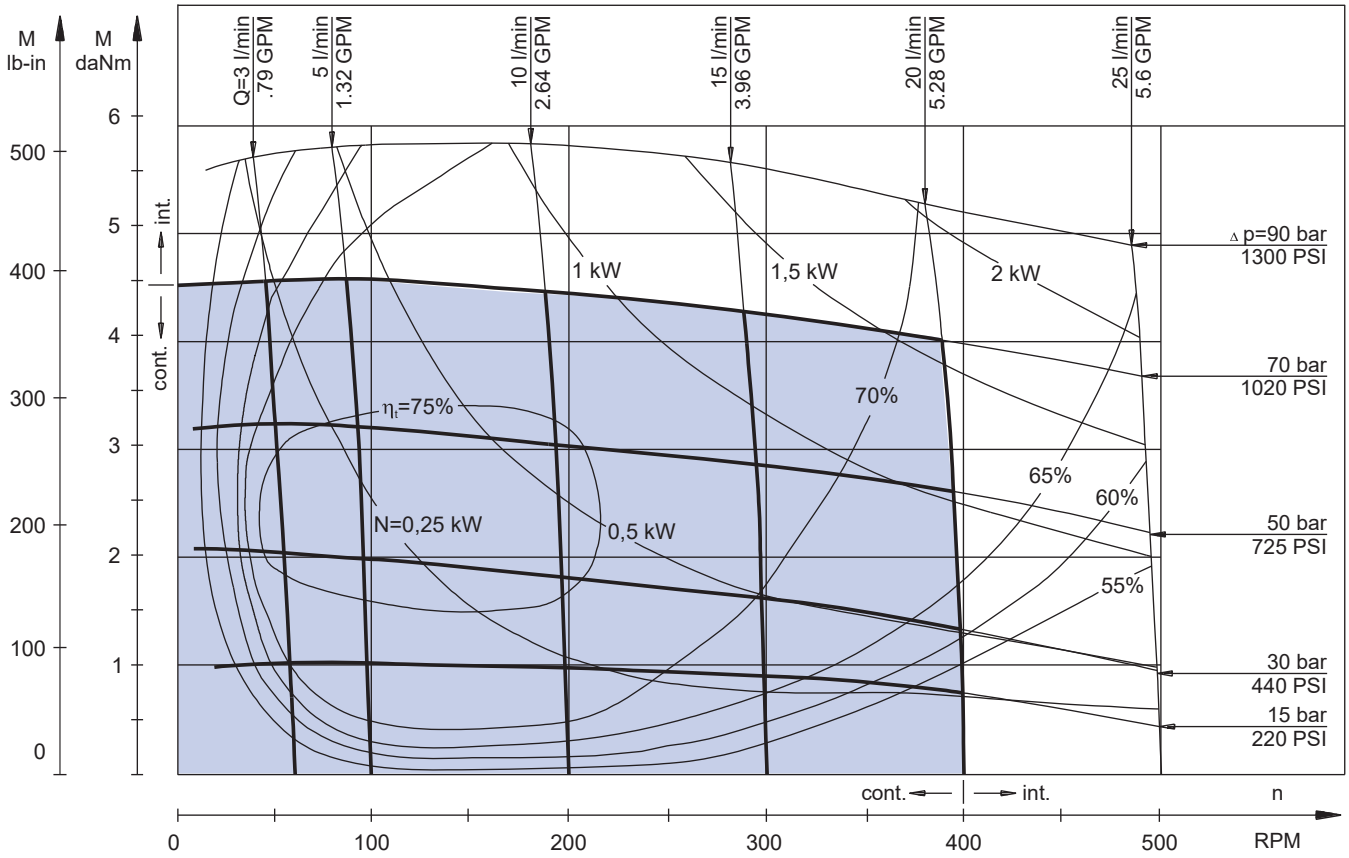

The function diagrams data is for average performance of randomly selected motors at back pressure 5÷10 bar [72.5÷145 PSI] and oil with viscosity of 32 mm²/s [150 SUS] at 50°C [122°F].

MM MOTORS

DIMENSIONS AND MOUNTING DATA
MM, MMS, MMP, MMD

Three Bolts Mount

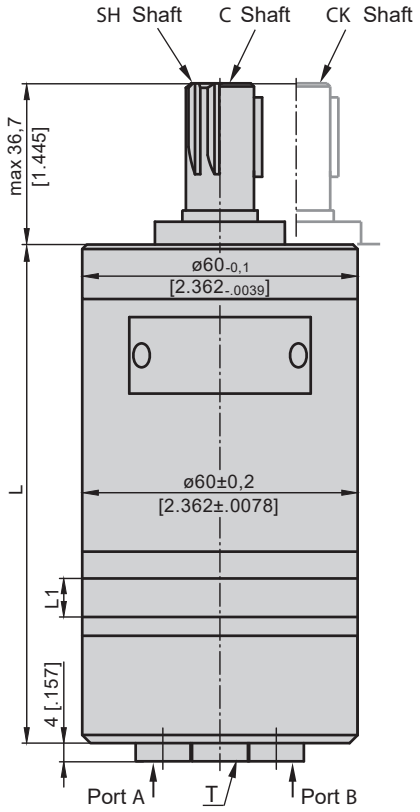

Shaft Dim. See Page 11

Flange Dim. See Page 10

Port Dim. See Page 10

Rear Ports

F Oval Mount (2 Holes)

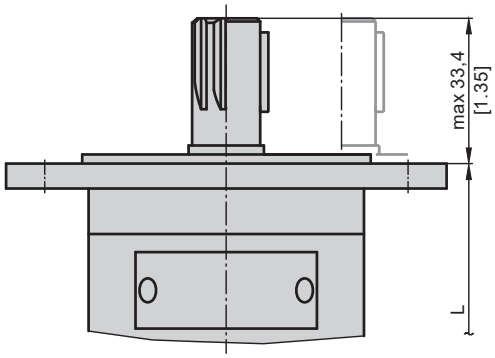

Standard Rotation	Reverse Rotation
Viewed from Shaft End	Viewed from Shaft End
Port A Pressurized - CW	Port A Pressurized - CCW
Port B Pressurized - CCW	Port B Pressurized - CW

S Side Ports

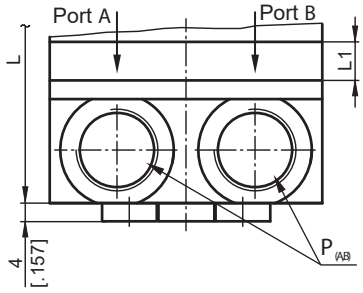

P Side Ports

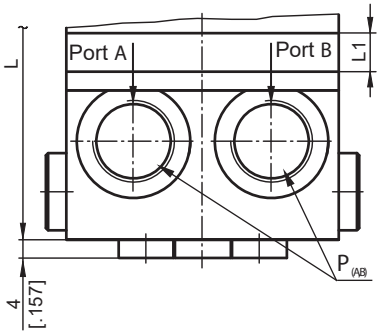

D Side Ports

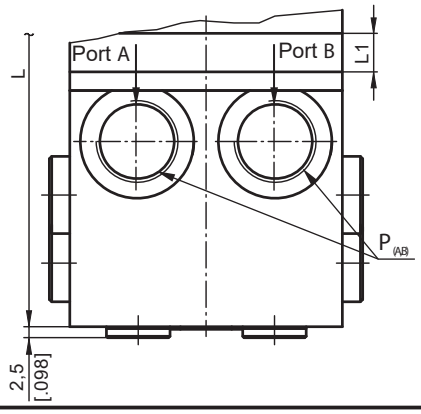

$P_{(A,B)}$: 2xG3/8 or 2xM18x1,5 - 12 mm [.47 in] depth
T : G1/8 or M10x1 - 10 mm [.39 in] depth

Type	L, mm [in]	Type	L, mm [in]	L_1, mm [in]
MM 8	104 [4.094]	MMS 8	105 [4.134]	3,5 [.138]
MM 12,5	106 [4.173]	MMS 12,5	107 [4.213]	5,5 [.217]
MM 20	109 [4.291]	MMS 20	110 [4.331]	8,5 [.335]
MM 32	114 [4.488]	MMS 32	115 [4.528]	13,5 [.531]
MM 40	117,5 [4.626]	MMS 40	118,5 [4.665]	17 [.669]
MM 50	121,5 [4.783]	MMS 50	122,5 [4.823]	21 [.827]

Type	L, mm [in]	Type	L, mm [in]	L_1, mm [in]
MMP 8	115 [4.528]	MMD 8	134 [5.276]	3,5 [.138]
MMP 12,5	117 [4.606]	MMD 12,5	136 [5.354]	5,5 [.217]
MMP 20	120 [4.724]	MMD 20	139 [5.472]	8,5 [.335]
MMP 32	125 [4.921]	MMD 32	144 [5.669]	13,5 [.531]
MMP 40	128,5 [5.039]	MMD 40	147,5 [5.807]	17 [.669]
MMP 50	132,5 [5.217]	MMD 50	151,5 [5.965]	21 [.827]

For “F” Flange +3,5 mm

mm [in]

MOUNTING

Three Bolts Mount

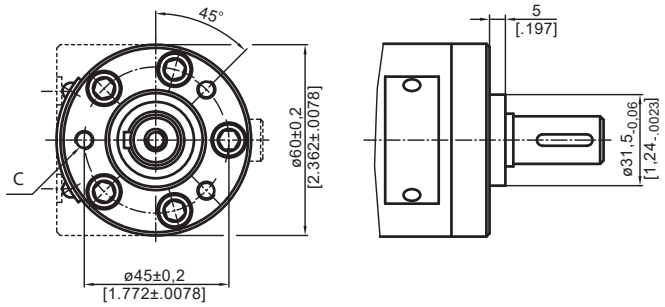

F Oval Mount (2 Holes)

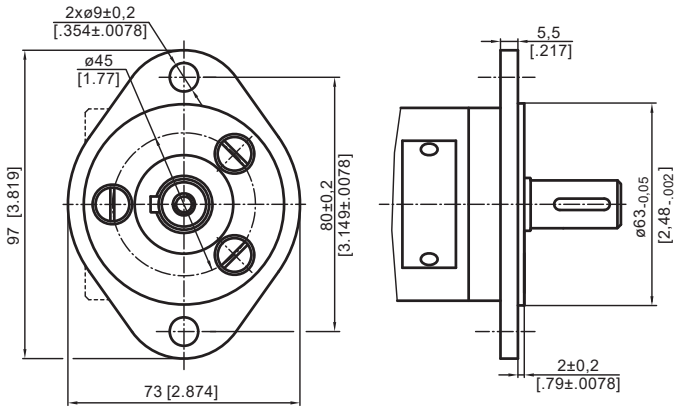

PORTS

Rear Ports

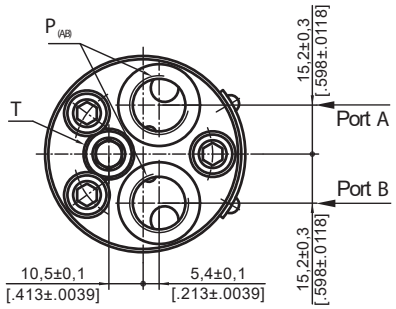

S Side Ports

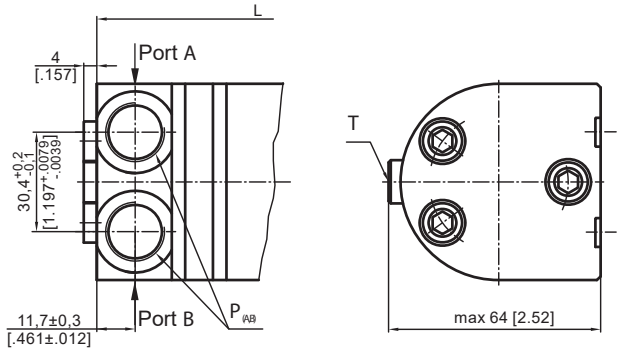

P Side Ports with Single Crossover Relief Valve

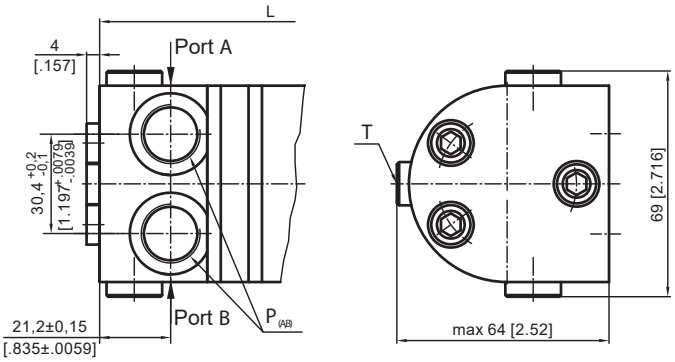

D Side Ports with Dual Crossover Relief Valve

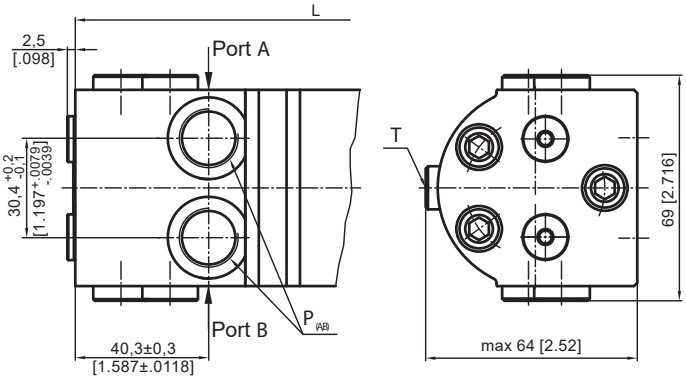

mm [in]

Standard Rotation
Viewed from Shaft End
Port A Pressurized - CW
Port B Pressurized - CCW

Reverse Rotation
Viewed from Shaft End
Port A Pressurized - CCW
Port B Pressurized - CW

C : 3xM6 - 12 mm [.47 in] depth
$P_{(A,B)}$: 2xG3/8 or 2xM18x1,5 - 12 mm [.47 in] depth
T : G1/8 or M10x1 - 10 mm [.39 in] depth

SHAFT EXTENSIONS

C - ø16 straight, Parallel key 5x5x16 DIN 6885
Max. Torque 3,9 daNm [345 lb-in]

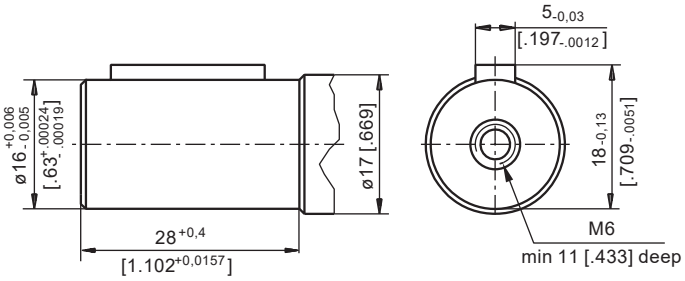

CK - ø14 straight, Parallel key 5x5x16 DIN 6885
Max. Torque 3 daNm [265 lb-in]

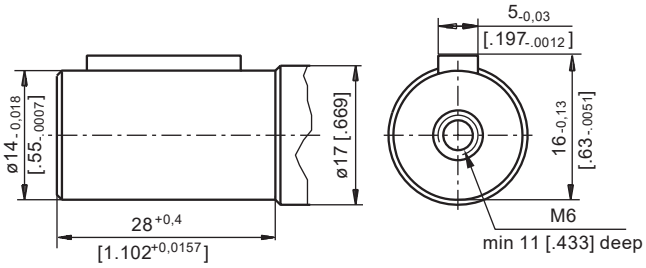

SH - ø16,5 Splined, B17x14 DIN 5482
Max. Torque 4,4 daNm [390 lb-in]

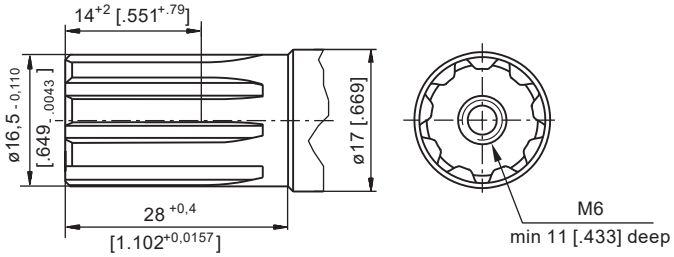

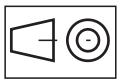
mm [in]

PERMISSIBLE SHAFT LOAD

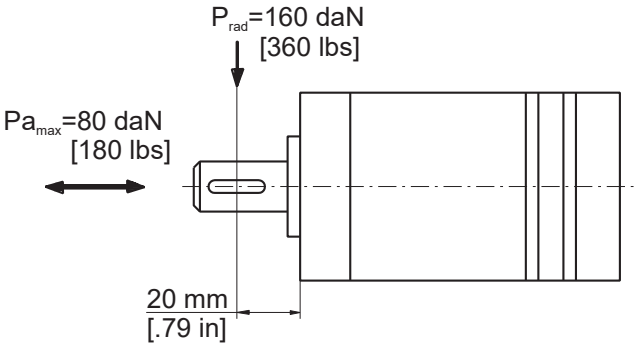

The permissible radial shaft load [Prad] is calculated from the distance [L] between the point of load application and the mounting surface:

$$P_{rad} = \frac{600}{n} \times \frac{13040}{61{,}5+L}, \text{ [daN]}$$

[L in mm; L≤ 80 mm]

$$P_{rad} = \frac{600}{n} \times \frac{1155}{2.42 + L}, \text{ [lbs]}$$

[L in inch; L≤ 3.15 in]

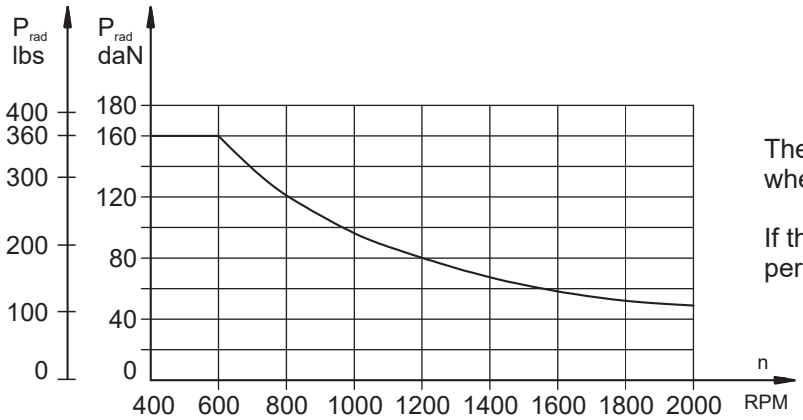

The drawing shows the permissible radial load when L=20 mm [.79 in].

If the calculated shaft load exceeds the permissible, a flexible coupling must be used.

MOTOR SPECIAL FEATURES

Special Feature Description	Order Code	Motor type														
		MM	MP	MPW	MP(W)N	MR	MRN	MRB	SP, SR	PL	RL	PK(Q)	RK	RW	MH	HW
Speed Sensor*	RS	O	O	-	-	O	-	-	-	-	-	-	-	-	O	-
Tacho connection	T	-	-	-	-	O	O	-	-	-	-	-	-	-	O	-
Low Leakage	LL	O	-	-	-	O	O	-	-	-	O	-	O	O	O	O
Low Speed Valving	LSV	-	-	-	-	O	-	-	-	-	-	-	-	-	O	O
Free Running	FR	O	O	O	O	O	O	-	-	O	O	O	O	O	O	-
Reverse Rotation	R	O	O	O	O	O	O	O	O	O	O	O	O	O	O	O
Paint**	P	O	O	O	O	O	O	O	O	O	O	O	O	O	O	O
Corrosion Protected Paint**	PC	O	O	O	O	O	O	O	O	O	O	O	O	O	O	O
Special Paint***	PS PCS	O	O	O	O	O	O	O	-	O	O	O	O	O	O	O
Check Valves		S	S****	S****	S	S****	S	S	S	S	S	S	S	S****	S****	S

O	Optional
-	Not applicable
S	Standard

* For sensor ordering see pages 123÷124.
** Colour at customer's request.
*** Non painted feeding surfaces, colour at customer's request.
**** Without check valves for "U" shaft seal versions.

MOTORS WITH SPEED SENSOR

MM...RS

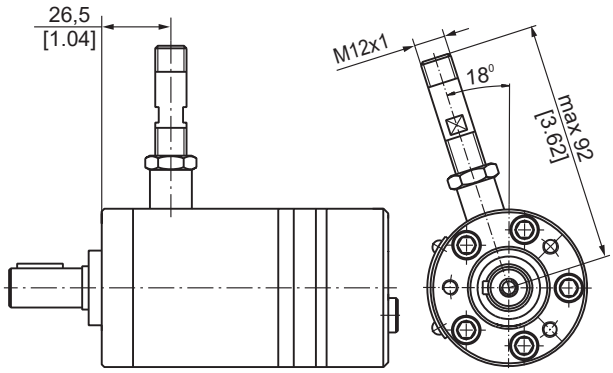

MP...RS and MR...RS

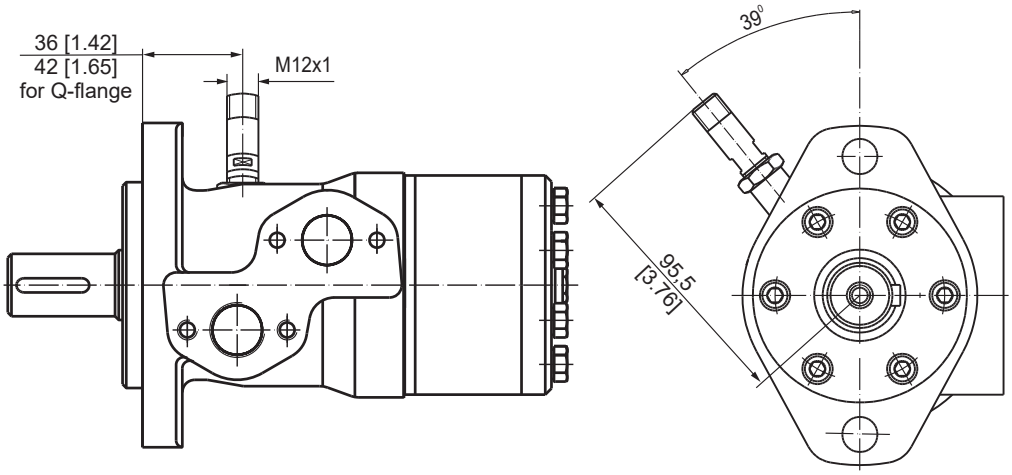

MH...RS

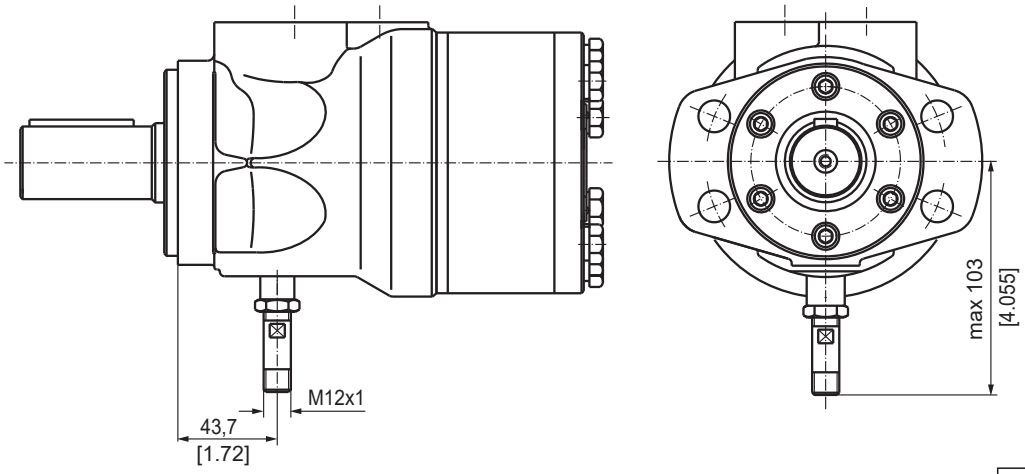

mm [in]

HYDRAULICS INTERNATIONAL
Quality Hydraulic Products
Ph 03 9874 1155 info@hydraulicsint.com.au

TECHNICAL DATA OF THE SPEED SENSOR

Technical data

Frequency range	0...15 000 Hz
Output	Universal PUSH PULL
Power supply	10-30 VDC
Current input	<20 mA (@24 VDC)
Maximum output current	500 mA
Ambient Temperature	-40...+125°C [-40...+257°F]
Protection	IP 67
Plug connector	M12-Series
Mounting principle	ISO 6149

Output signal

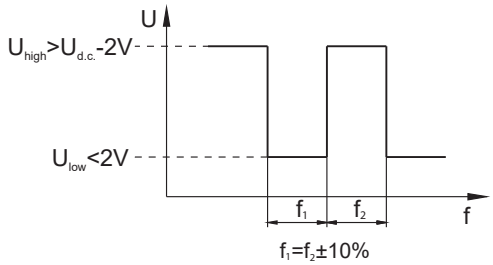

Load max.:I_{high}=I_{low}<50mA

Motor type	MM	MP	MR	MH
Pulses per revolution	30	36	36	42

Wiring diagrams

PNP

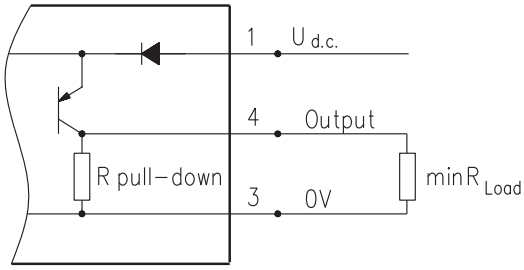

NPN

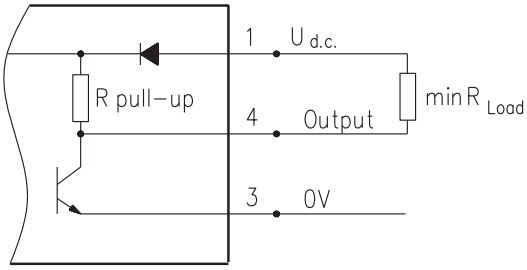

R_{Load} [kΩ]=$U_{d.c.}$ [V]/I_{max} [mA]

Stick type

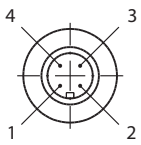

Terminal No.	Connection	Cable Output
1	$U_{d.c.}$	Brown
2	No connection	White
3	0V	Blue
4	Output signal	Black

Order Code for Speed Sensor

Sensor Code	Electric connection
RS	Connector BINDER 713 series
RSL2,5	Cable output 3x0,25; 2,5 m [98 in] long
RSL3,5	Cable output 3x0,25; 3,5 m [138 in] long
RSL5	Cable output 3x0,25; 5 m [196 in] long
RSL10	Cable output 3x0,25; 10 m [394 in] long

NOTE: * - The speed sensor is not fitted at the factory, but is supplied in a plastic bag with the motor. For installation see enclosed instructions.